FULL BODY (Large)

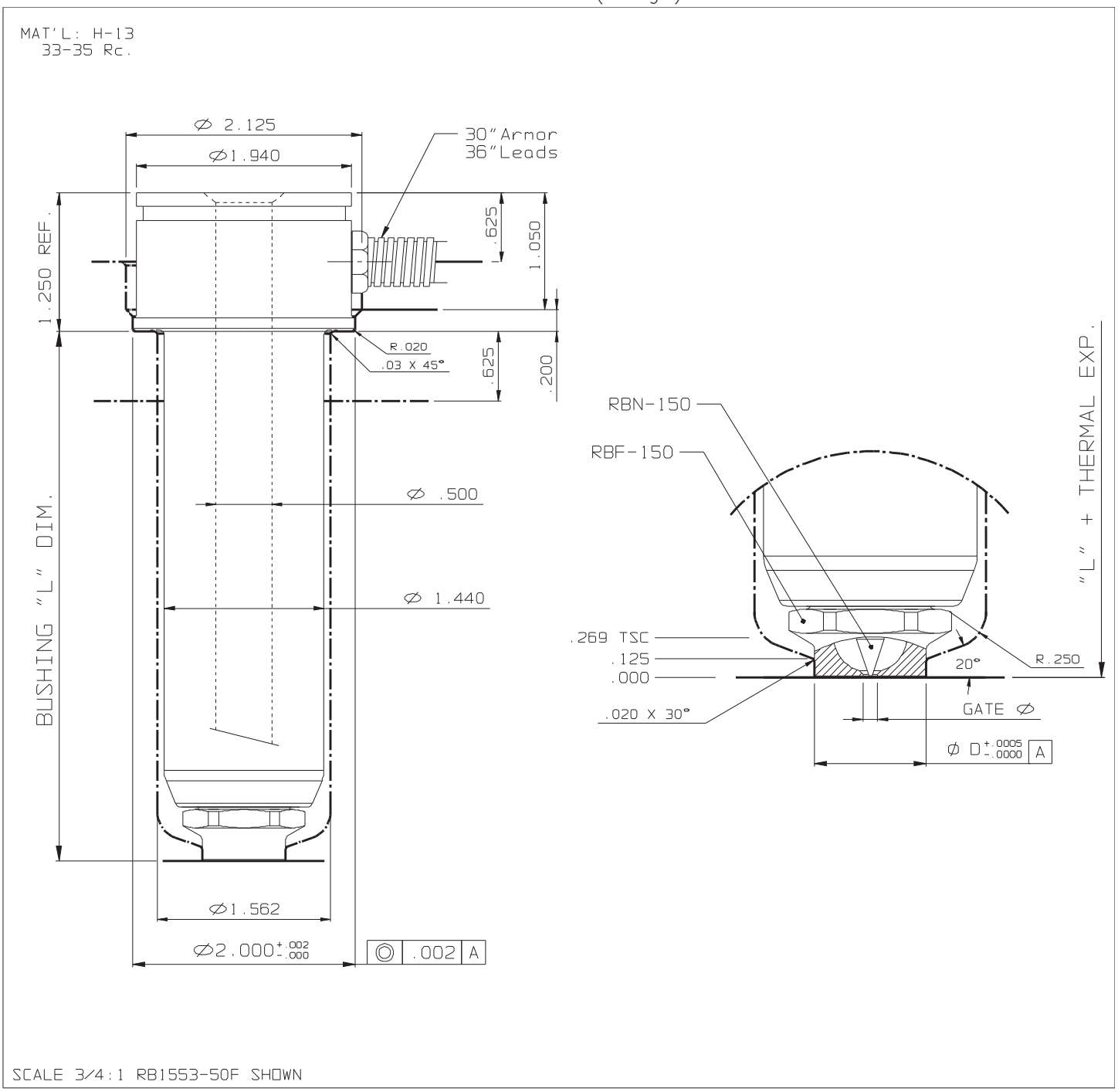

STANDARD SIZES					(240 V)	
L	½ SPH. RAD.	¾ SPH. RAD.	FLAT TYPE	MAN. TYPE	Watts	T/C
2.250	RB1527-50F	RB1527-75F	RB1527-38F	RB1527-68F	475	J2-06
2.750	RB1533-50F	RB1533-75F	RB1533-38F	RB1533-68F	550	J2-06
3.250	RB1537-50F	RB1537-75F	RB1537-38F	RB1537-68F	640	J2-06
3.750	RB1543-50F	RB1543-75F	RB1543-38F	RB1543-68F	640	J2-10
4.250	RB1547-50F	RB1547-75F	RB1547-38F	RB1547-68F	680	J2-10
4.750	RB1553-50F	RB1553-75F	RB1553-38F	RB1553-68F	760	J2-10
5.250	RB1557-50F	RB1557-75F	RB1557-38F	RB1557-68F	760	J2-10
5.750	RB1563-50F	RB1563-75F	RB1563-38F	RB1563-68F	760	J2-10
6.250	RB1567-50F	RB1567-75F	RB1567-38F	RB1567-68F	830	J2-10
6.750	RB1573-50F	RB1573-75F	RB1573-38F	RB1573-68F	830	J2-10
7.250	RB1577-50F	RB1577-75F	RB1577-38F	RB1577-68F	830	J2-10
7.750	RB1583-50F	RB1583-75F	RB1583-38F	RB1583-68F	830	J2-10
8.250	RB1587-50F	RB1587-75F	RB1587-38F	RB1587-68F	900	J2-14
8.750	RB1593-50F	RB1593-75F	RB1593-38F	RB1593-68F	900	J2-14
9.250	RB1597-50F	RB1597-75F	RB1597-38F	RB1597-68F	900	J2-14

OPTIONS		
END CAPS		
STANDARD	D	GATE
RBF-150 RBF-200	.750 1.000	.094

A replaceable T/C is installed with each bushing.

NOTE: The floating needle has been incorporated, but nozzle thermal expansion must be considered. Orifice must be adjusted to suit.